DRAWING MADE IN THIRD ANGLE PROJECTION

THIS DRAWING IS UNPUBLISHED. RELEASED FOR PUBLICATION ,19 .

© COPYRIGHT 19 BY AMP INCORPORATED. ALL INTERNATIONAL RIGHTS RESERVED.

MOD	LOC	DIST	P	F
23	BD	39		

REVISIONS

ZONE	LTR	DESCRIPTION	DATE	APPD
	F	REDRAWN AND REV PER ECN BD4183	8-21-90	KB

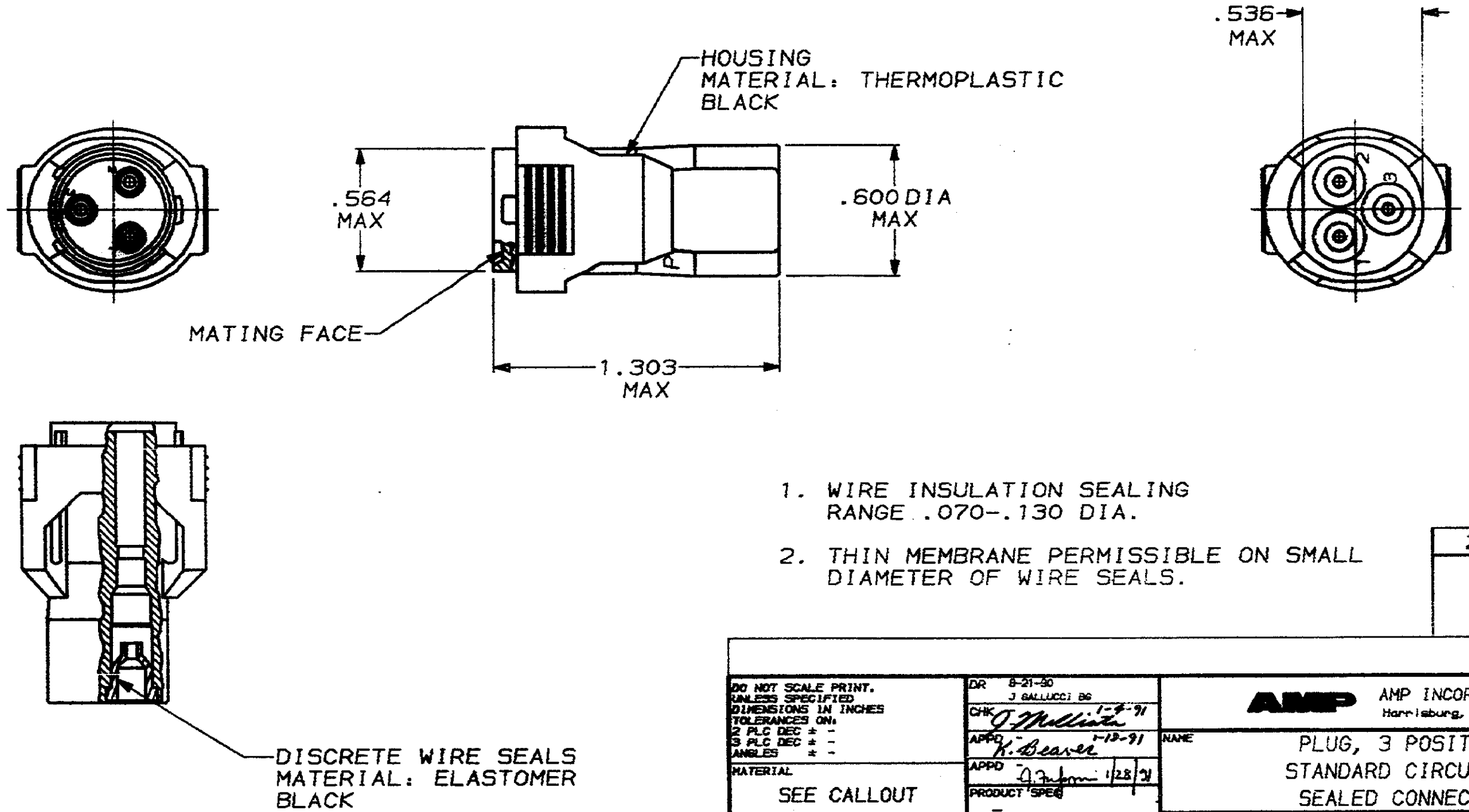

1. WIRE INSULATION SEALING RANGE .070-.130 DIA.
2. THIN MEMBRANE PERMISSIBLE ON SMALL DIAMETER OF WIRE SEALS.

207567-1

PART NUMBER

DO NOT SCALE PRINT. UNLESS SPECIFIED DIMENSIONS IN INCHES TOLERANCES ON: 2 PLC DEC ± - 3 PLC DEC ± - ANGLES ± -

MATERIAL: SEE CALLOUT

FINISH: -

DR 8-21-90 J GALLUCCI BG

CHK J. Milliata 1-4-91

APPD K. Beaver 1-13-91

APPD J. Fuhrmann 1/28/91

PRODUCT SPEC -

APPLICATION SPEC -

WEIGHT -

AMP INCORPORATED Harrisburg, Pa. 17105

NAME: PLUG, 3 POSITION, STANDARD CIRCULAR SEALED CONNECTOR

SIZE	FSCM NO	DRAWING NO
B	00779	207567

SCALE 2:1 SHEET 1 OF 1

CUSTOMER DRAWING

AMP 1470-15 REV 3-89

06 NOV 1990 11:27:42 AMPT0842